Promote
yourself

DYNAMIC
PROJECTION
INSTITUTE

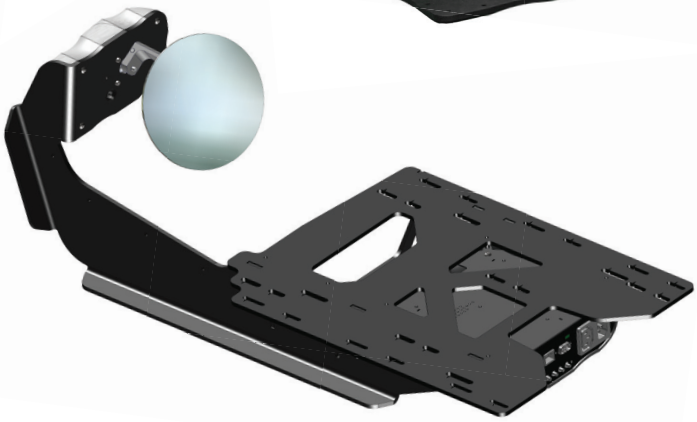

Mirror Head
E-Vision Laser 6500

Item Number: MH11-L + MHA-DEL1

The Mirror Head is a high-tech mirror that is digitally operated and can move either rapidly or slowly to project pictures, videos and texts on any surface - whether it s moving or static. Through its high-level of performance, the entire system guarantees accuracy. It is important to note that the Mirror Head is also extendable to almost every projector and a quality product made in Austria.
The outcome is a remarkable realization of the intended message. This application paves the way to unprecedented possibilities in lighting, projection and interior design.

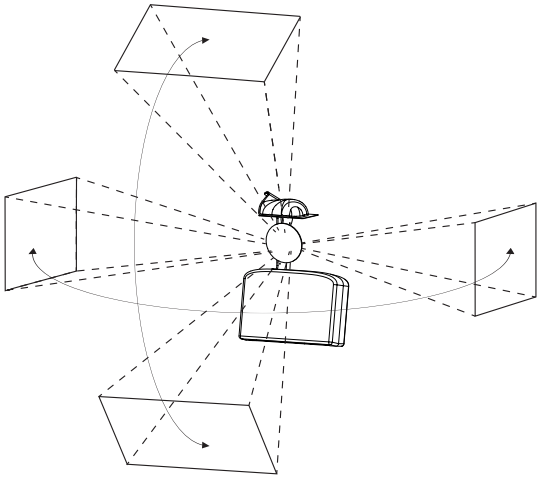

Copyright © 2014 - 2018 Dynamic Projection Institute GmbH. All rights reserved. http://www.dynamicprojection.com
Weights and dimensions shown are approximate. Specifications and appearance are subject to change without notice. MH11 product data sheet - as of January 2018

SPECIFICATIONS MIRROR HEAD 11 WITH E-VISION LASER 6500

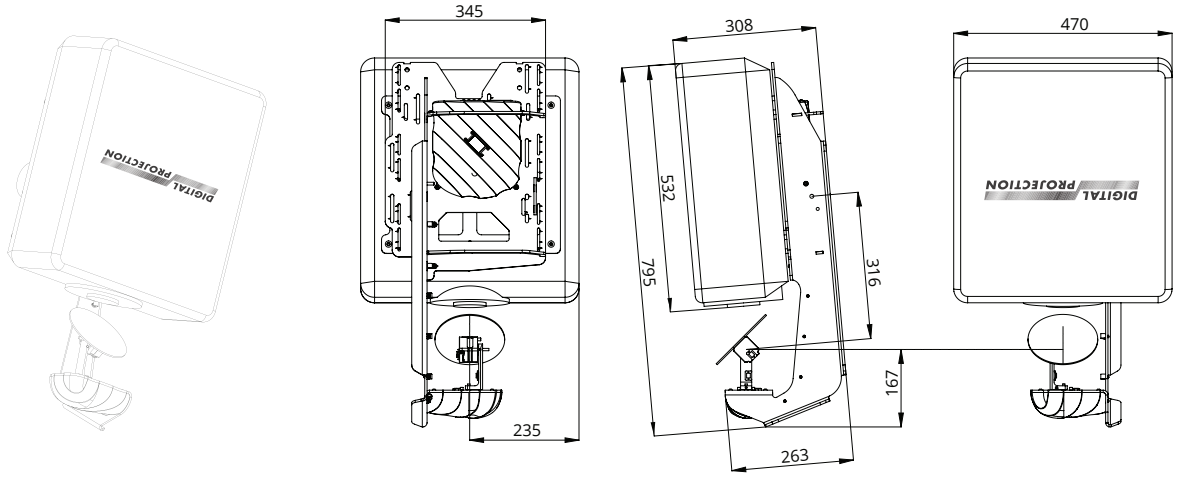

MECHANICAL SPECIFICATIONS WITH E-Vision Laser 6500

Fixture dimensions (W / D / H)	470 x 308 x 795 mm
Projector 6500 + Lens	25,0 kg
Mirror Head 11 unit only	10,8 kg
MHA-DEL1 (adapter plate)	2,2 kg
Fixture total	38,0 kg

ELECTRICAL SPECIFICATIONS

INPUT POWER	100-240V / 2-1A / 50-60Hz, Max. 10A (3-prong C14 male socket)
OUTPUT POWER	AC loop trough for projector (3-prong C13female socket)

PROJECTOR COMPATIBILITY

E-Vision Laser 6500
WUXGA (1920x1200), 6500 Lumens,
C.R. 5000:1 (dynamic)
3 Lenses: 1.54 - 1.93:1 / 1.93 - 2.91:1 / 3.0 - 5.0:1

Due to optical reasons we do not recommend the use of a throw ratio below 1.6:1

IMPORTANT NOTE: For information about the specifications, operations and use of the projector carefully read the instruction manual of your projector. http://www.digitalprojection.com/emea/dp-projectors/e-vision-laser-6500/

To protect the environment, please try to recycle the packing material as much as possible.

MIRROR HEAD SPECIFICATIONS / FEATURES

- DMX-512 control over 14 DMX channels
- DMX IN / OUT port (5-pin male and female XLR connectors)
- Art-NetTM connection (RJ45) (Art-NetTM designed by and Copyright Artistic Licence Holdings Ltd.)
- Mirror Tilt modes: 90° & 162°
- Mirror Pan mode: 180°
- High resolution micro step motors with maintenance free direct drive
- Self calibrating mirror position for high accuracy
- Absolut reposition accuracy <0,03°
- Movement accuracy: Pan and Tilt from the same direction to the programmed point within approximately 0,01°
- RS232 remote control connection for projector
- (D-sub 9 male) - cable included
- Flashable firmware (Mini USB)
- High resolution LED-Display for easy configuration
- LED-Display backlight auto turn off for energy saving
- LED-Display Flip / Flop mode for easy reading in difficult positions
- Coated mirror for optimum reflection ~98% refraction factor
- Optimized mirror optics for the specific projector
- Ambient Light LED with high power 3 Colour LEDs (18 Watt total)
- High durability black powder-coating surface finishing
- Mounting plate optimized for specific projector mounting
- Easy to adjust mounting system
- Heavy-use truss or wall mounting supports
- Passive cooled system (excluding projector)
- Environmental tolerances:
  Ambient operating temperature range: 5°–35°C,
  Humidity: 20%–80% (non-condensing)
- Package includes: RS232 cable, AC-loop through cable, Quick installation guide

For more detailed information visit: http://www.dynamicprojection.com/mh-support

Copyright © 2014 - 2018 Dynamic Projection Institute GmbH. All rights reserved. http://www.dynamicprojection.com
Weights and dimensions shown are approximate. Specifications and appearance are subject to change without notice. MH11 product data sheet - as of January 2018